TAG HARDWARE

SYMPHONY OFFICE
extension attachment

310.8207.XXX

TAG HARDWARE

FEATURES

Attach extensions to 19" tall Symphony Wall Organizers to transform it into an office organizer

These extensions provide greater distance from the wall to the backside of the horizontal bars allowing for placement of various office accessories

The Extension Attachment creates space for the various Symphony Office Accessories, allowing you to organize pens, scissors, paper clips, folders, and tablets

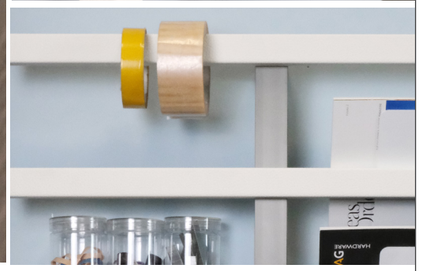

SPECS

EXTENSION ATTACHMENT

310.8207.[FINISH]xxx

OPTIONS

FINISH:

MAL MATTE ALUMINUM
SG SLATE
MNL MATTE NICKEL
MG MATTE GOLD

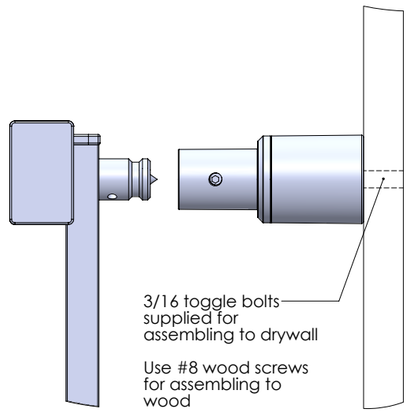

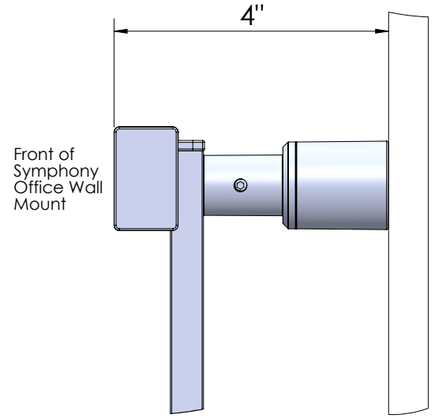

DIMENSIONS

310.8207.xxx

FINISHED PRODUCT

TAG HARDWARE

SYMPHONY OFFICE
pencil holder

310.8520.WH

TAG HARDWARE

FEATURES

Add the Pencil Holder to Symphony Office to store pens, markers, scissors and more

The Pencil Holder easily locks into the horizontal bars without any tools

Adjust the positioning as needs change

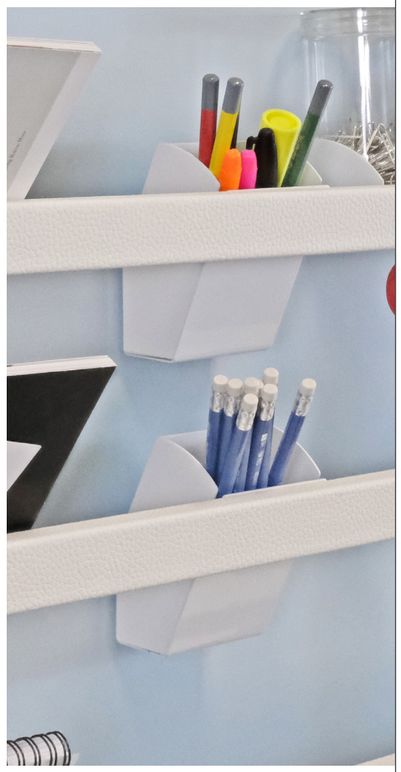

SPECS

PENCIL HOLDER

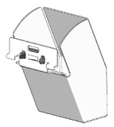

310.8520.WH

OPTIONS

FINISH:

WH
WHITE

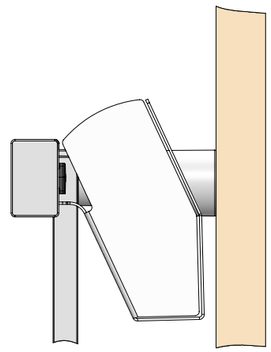

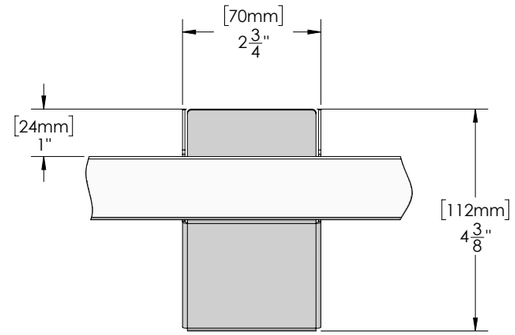

DIMENSIONS

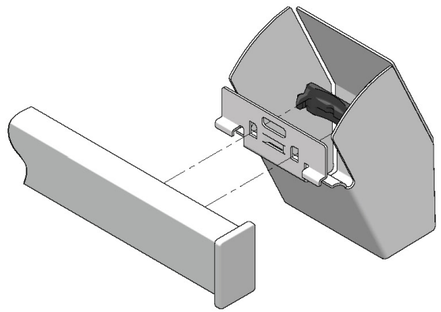

FINISHED PRODUCT

310.8520.WH

TAG HARDWARE

SYMPHONY OFFICE
tablet stand + glass whiteboard

310.8524.WH

TAG HARDWARE

FEATURES

The Tablet Stand allows you to place your tablet at eye level, making it ideal for video calls

This accessory also comes with a glass white board, creating a space to write down reminders and quick notes

The Tablet Stand easily locks into the horizontal bars without any tools, allowing you to adjust the positioning as needs change

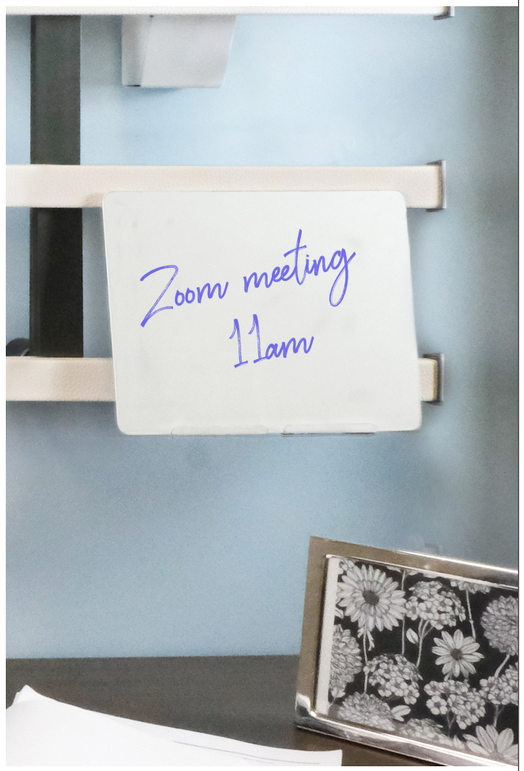

SPECS

TABLET STAND + GLASS WHITEBOARD

310.8524.WH

OPTIONS

FINISH:

WH
WHITE

DIMENSIONS

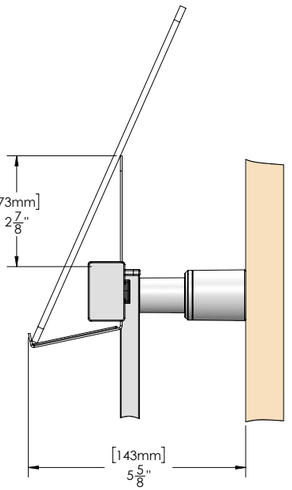

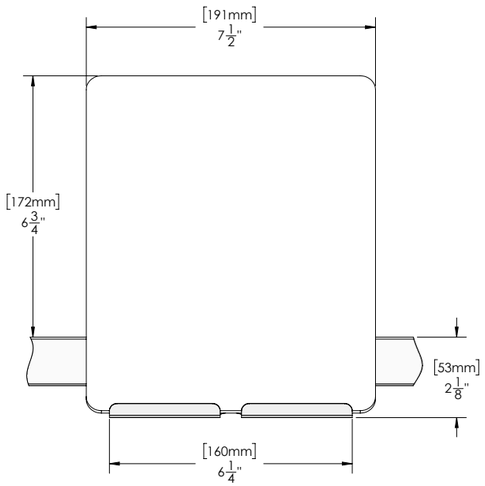

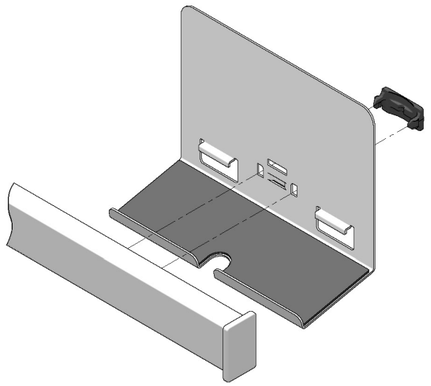

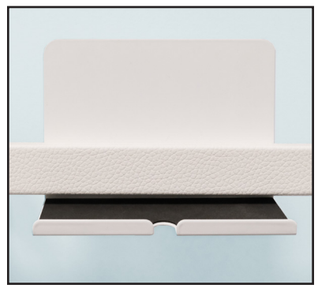

310.8524.WH

FINISHED PRODUCT

TAG HARDWARE

SYMPHONY OFFICE
pencil tray + containers

310.8522.3.WH

TAG HARDWARE

FEATURES

This multi-function accessory has hidden hooks to hang small accessories and comes with clear containers

Use the containers to store small accessories like paper clips and USB drives

The containers can also be removed to use the tray for other purposes

The Tray easily locks into the horizontal bars without any tools, allowing you to adjust the positioning as needs change

HIDDEN HOOKS
The tray has four hooks which can be used to hang rulers, scissors and other small office tools

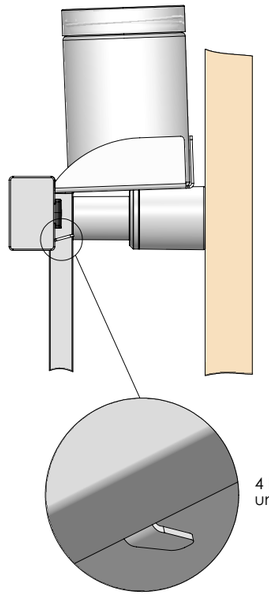

4 hidden hooks under the tray

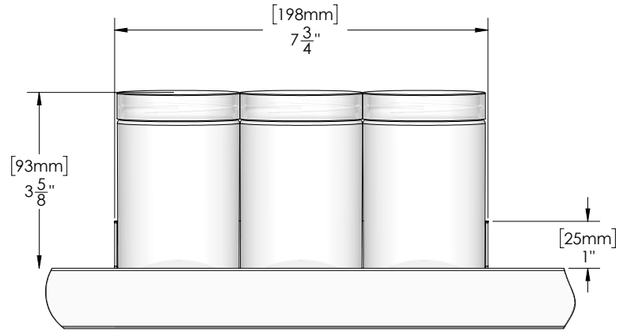

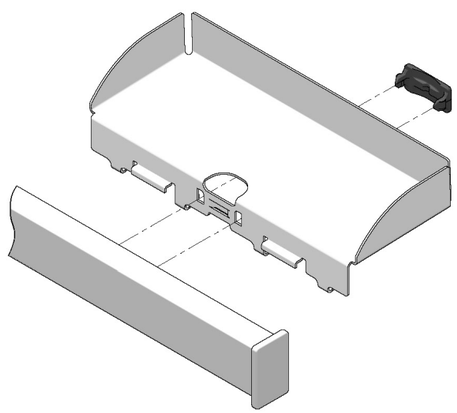

DIMENSIONS

SPECS

PENCIL TRAY + CONTAINERS

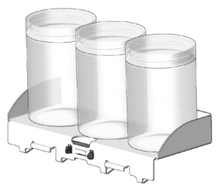

310.8522.3.WH

OPTIONS

FINISH:

WH
WHITE

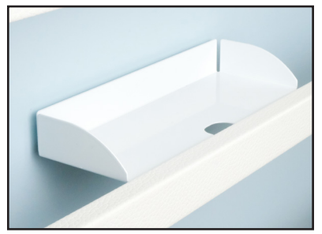

310.8523.3.WH

FINISHED PRODUCT

TAG HARDWARE

SYMPHONY OFFICE
paper tray

310.8521.WH

TAG HARDWARE

FEATURES

The Paper Tray holds notebooks, small books, and loose documents

The surface allows you to add magnets for attaching additional notes

The Paper Tray easily locks into the horizontal bars without any tools, allowing you to adjust the positioning as needs change

SPECS

PAPER TRAY

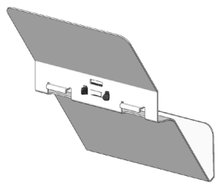

310.8521.WH

OPTIONS

FINISH:

WH
WHITE

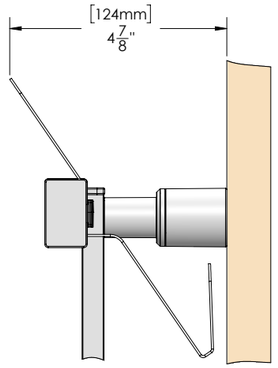

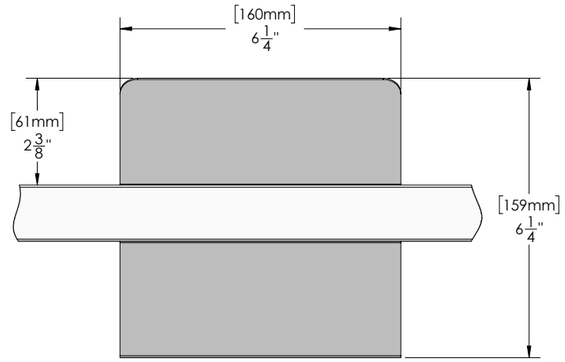

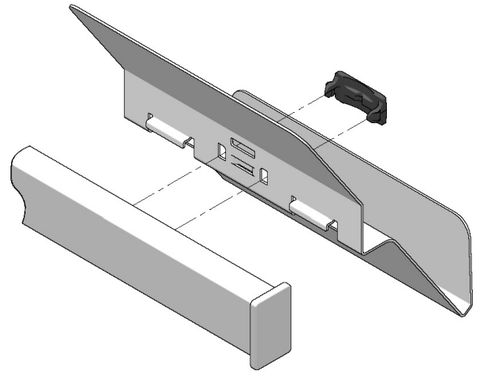

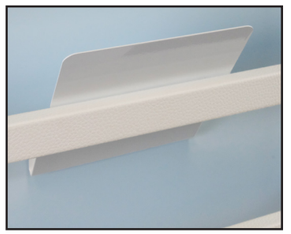

310.8521.WH

DIMENSIONS

FINISHED PRODUCT