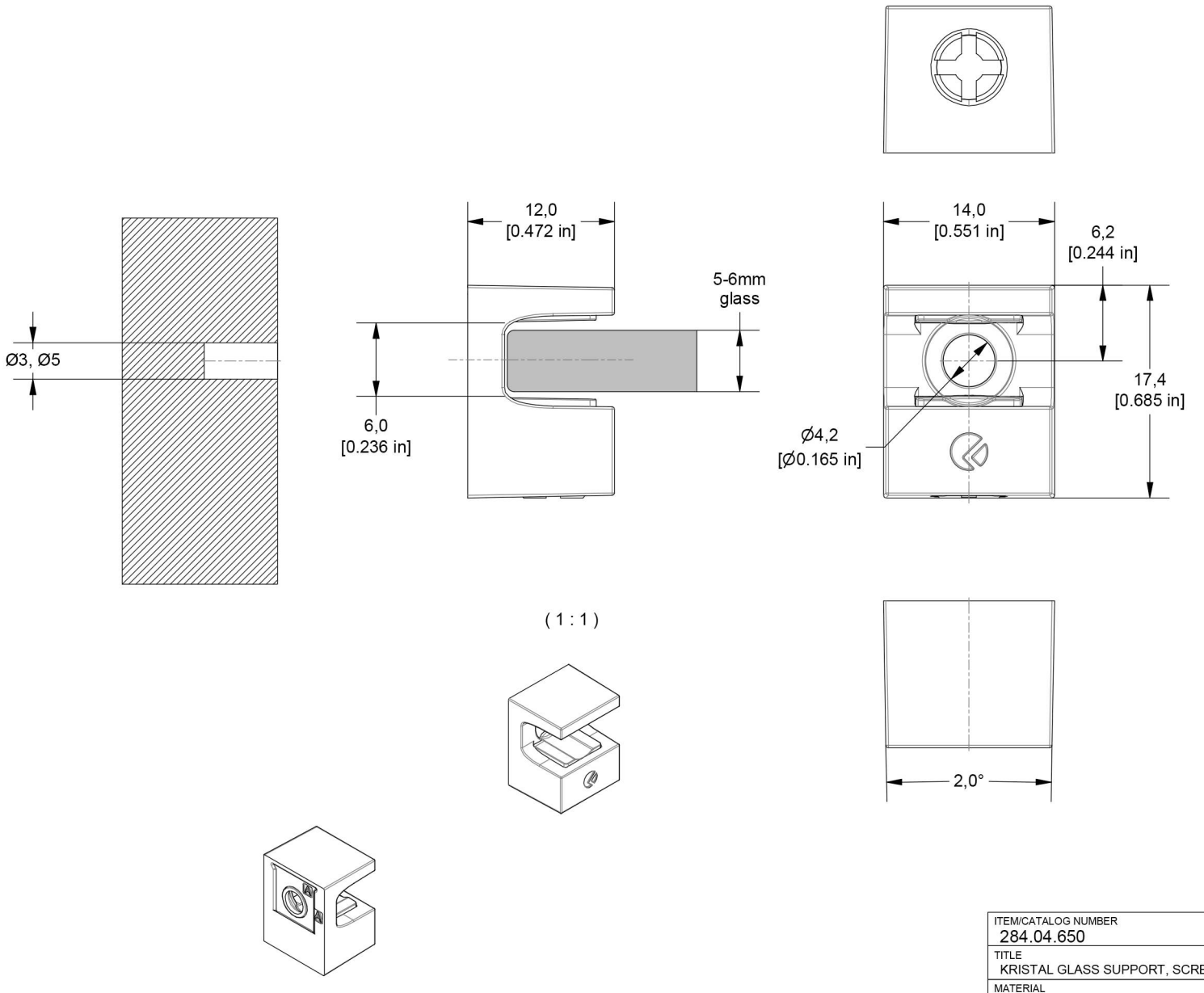

REVISION	-
ITEM/CATALOG NUMBER	284.04.650
DRAWING NUMBER	284.04.650
TITLE	KRISTAL GLASS SUPPORT, SCREW MOUNT, 5-6MM GLASS
MATERIAL	ZINC
FINISH	NICKEL-PLATED
DRAWN BY:	NPG
APPROVED BY:	JF
DATE:	7/21/2010
SCALE:	2 : 1
TOLERANCE SPECIFICATION	ISO 2768-m
ISO E	
SIZE	A
SHEET	1 OF 1

NOTICE
THIS DRAWING AND ALL INFORMATION THEREON IS THE PROPERTY OF:
HÄFELE
THIS DRAWING AND INFORMATION THEREON IS CONFIDENTIAL. MUST NOT MADE PUBLIC COPIED OR USED TO DISADVANTAGE OF SAID HÄFELE AMERICA CO. IT IS SUBJECT TO RETURN ON DEMAND.
2017 HÄFELE AMERICA CO.